Company: Joyoung International Trading Co.,Limited
Atten：Smiling
Mobile/WhatsApp:+86 18050035902
E-mail: info@htechplc.com
Website: https://www.joyoungintl.com/

Technical Information

Honeywell

ControlEdge HC900 Controller Specifications

-52-03-31, November 2019

Overview

The Honeywell ControlEdge HC900 Controller is an advanced loop and logic controller offering a modular design sized to satisfy the control and data management needs of a wide range of process equipment. When combined with the optional 900 Control Station operator Interface that is highly integrated with the controller's database, configuration and setup time is minimized. This powerful combination together with Honeywell's performance proven control technology provides users an ideal solution for process control. Open Ethernet connectivity with Modbus TCP Protocol also allows network access using a variety of HMI/SCADA software. Program execution environment is protected using an independent watchdog timer.

Easy-to-use Windows-based Designer software, operable over Ethernet or RS485 port (isolated) simplifies controller configuration. The software is available in English and Chinese language version. It provides advanced monitoring functions for debug, allows run-mode process configuration changes while maintaining process control, uploads the complete, annotated graphic controller configuration, plus supplies an array of reports for enhanced documentation. The ControlEdge HC900 Controller provides superior PID loop control and more robust analog processing than most logic controllers without compromising logic performance. A separate, fast scan cycle executes a rich assortment of logic and calculation function blocks. Logic blocks may also execute in the same scan with analog function blocks for time critical events. These function blocks may be fully integrated into a combined analog and logic control strategy for uncompromising control performance.

For more information see specification sheets:

- ControlEdge 900 Platform Modules Specs 51-52-03-41
- Designer Software Specs 51-52-03-43

Applications

Mining & Metals	Furnaces, Kilns, Boilers
Chemicals,	Extruders Autoclaves
Pharmaceuticals	Sterilizers, Dryers
Rail/ Infrastructure	Burner Management,
HVAC/ DataCenters	Combustion Control
Pulp & Paper	Emergency Shutdown
Cement & Glass	Pipeline Monitoring,
Power	Spill Prevention

Features Summary

- Non-redundant and Redundant Architectures
- Sequence of events support (SOE)
- Redundant and Non-redundant Safety Universal IO
- PID Control with advanced Accutune III auto-tuning
- Safety peer communication between ControlEdge HC900 controllers
- External watchdog timer with independent clocks that detect spurious CPU lockups
- Adjustable recipe pool memory lets you allocate memory for recipes, SP Profiles, sequences and schedules to meet your needs
- Up to 4608 points with remote I/O
- Boolean Logic programming. Robust assortment of over 100 algorithms

Features Summary, continued ..

- Advanced Floating Point Math Functions.
- Extensive alarm and event monitoring
- Up to 2304 galvanically Isolated, Analog Inputs
- Up to 1008 redundant UIO points
- New I/O voting and output validation function blocks.
- Remote I/O Racks with wire for extended distance.
- Star or Ring topology on IO network using recommended switches
- Scanner and I/O Insert/Remove under power
- LED on/off indicators on digital I/O
- Graphic Function Block Configuration
- Open 10MB or 10/100MB Ethernet interface using Modbus/TCP. Peer-to-peer communications via Ethernet
- E-mail alarm/event messaging on priority
- Ramp/Soak Setpoint Programmers
- Setpoint Schedulers with multiple outputs
- Sequencers with 16 Outputs each
- Modbus read/write parameters assignable to either fixed or custom addresses for access by HMI or supervisory software.
- Modbus TCP Initiator
- Gas flow function blocks per American Gas Association specs. (non-Safety configurations only).
- Calendar block for triggering events
- Non-interfering process/safety worksheets capable of handling process and safety configurations.
- Built in Version Control
- Fast updates - 10 ms digital and UIO (900U02-xxxx) 100ms analog capable

  Note: Low Level AI updates @ 0.5 sec.

Non-redundant Architectures

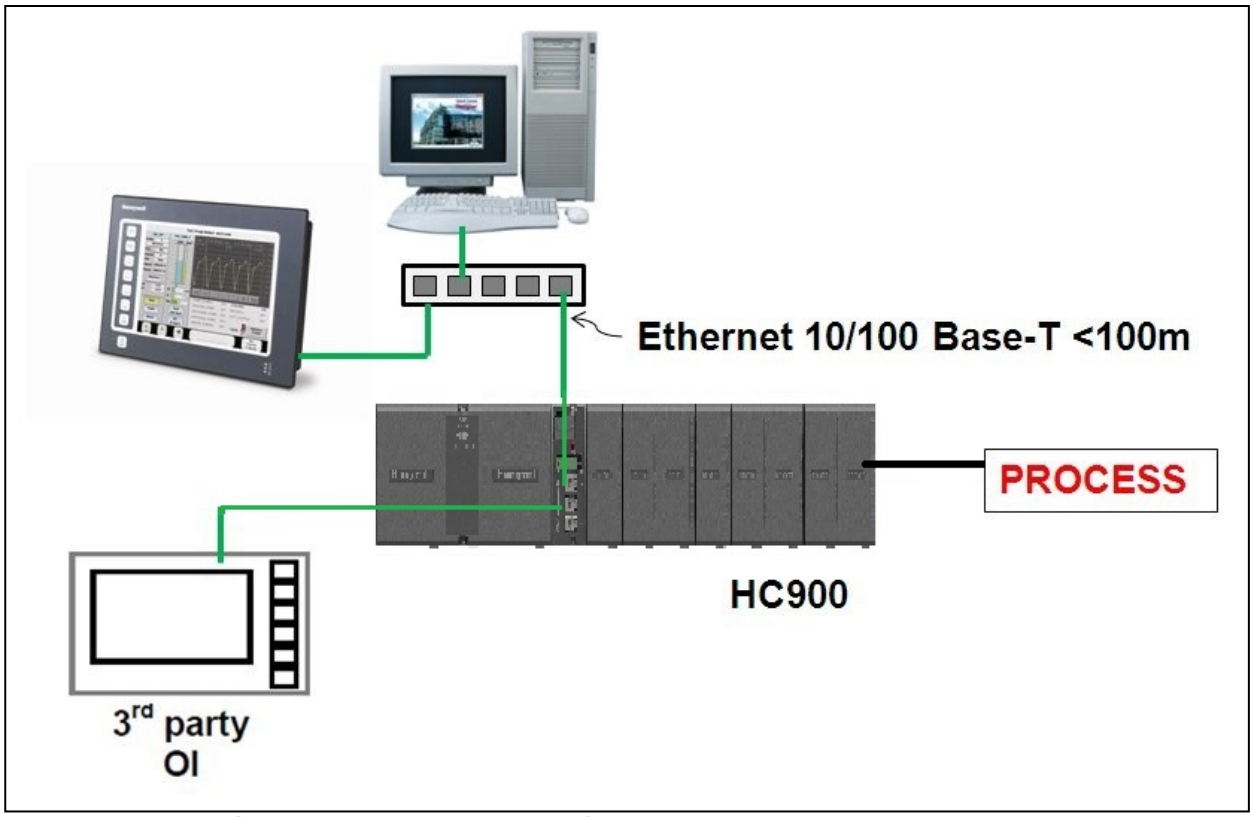

Figure 1 - SINGLE PROCESS/SINGLE RACK- PROCESS

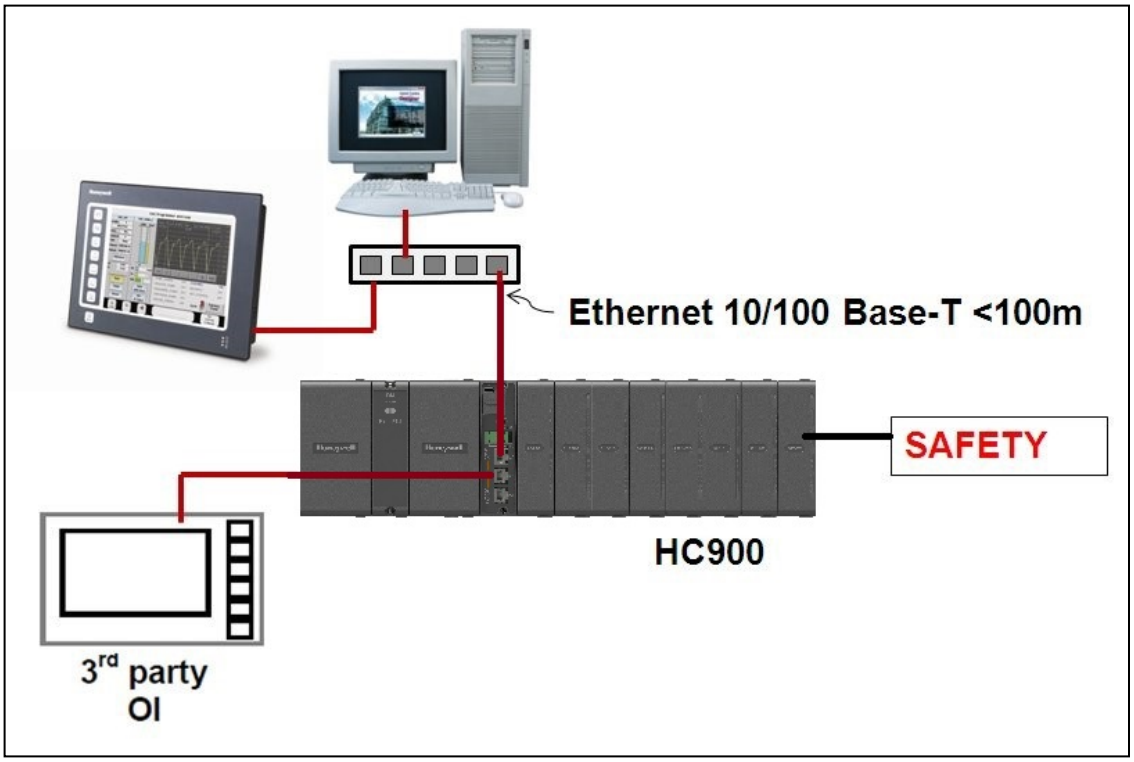

Figure 2 - SINGLE PROCESS/SINGLE RACK- SAFETY

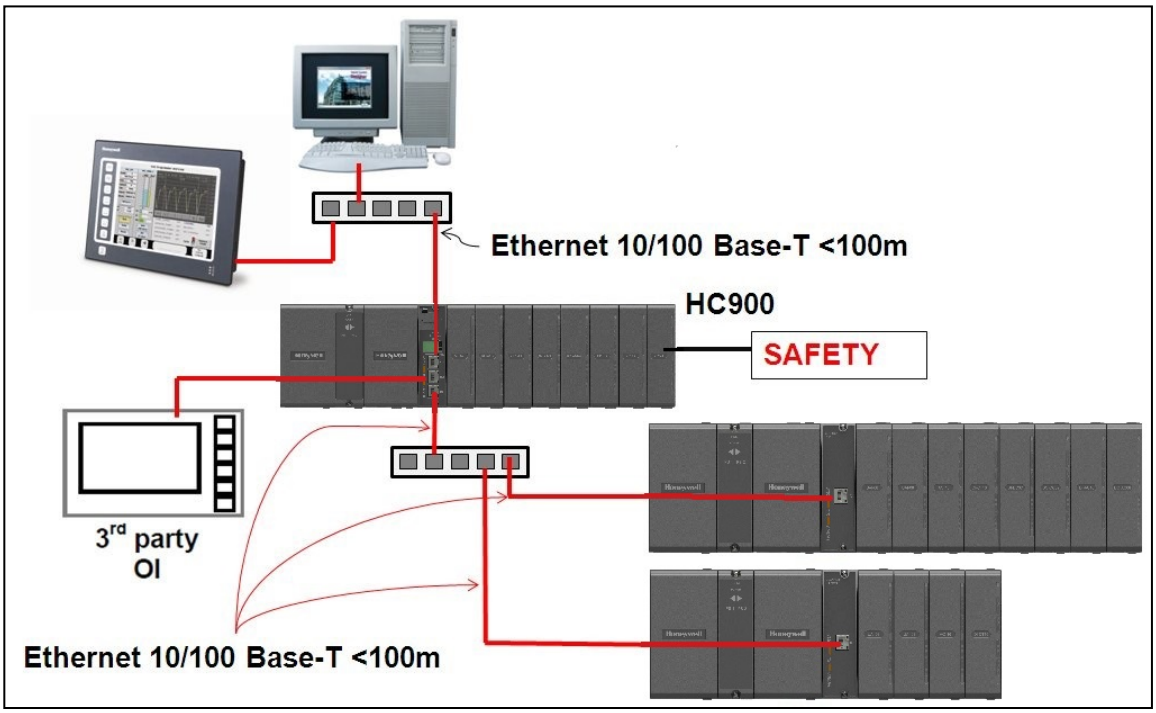

Figure 3 - SINGLE PROCESS/MULTIPLE REMOTE RACKS- SAFETY

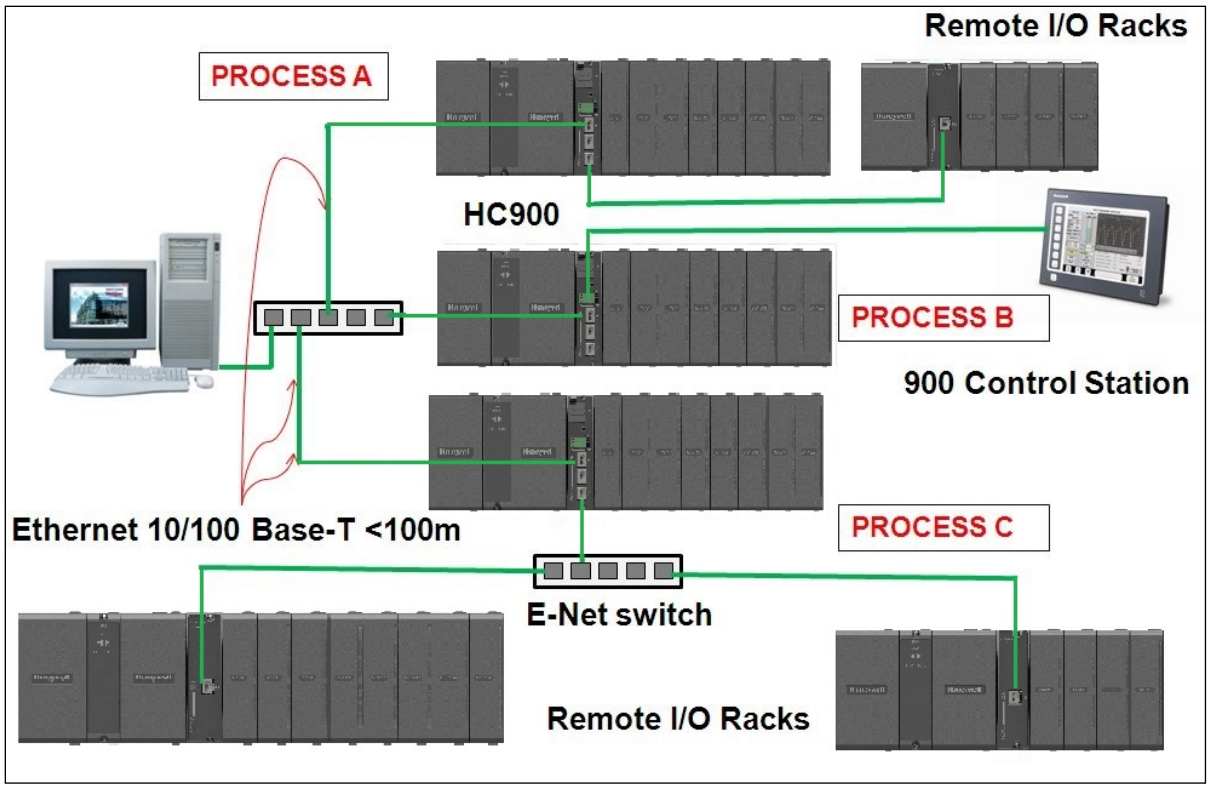

Figure 4 - MULTIPLE PROCESS/MULTIPLE RACKS – PROCESS

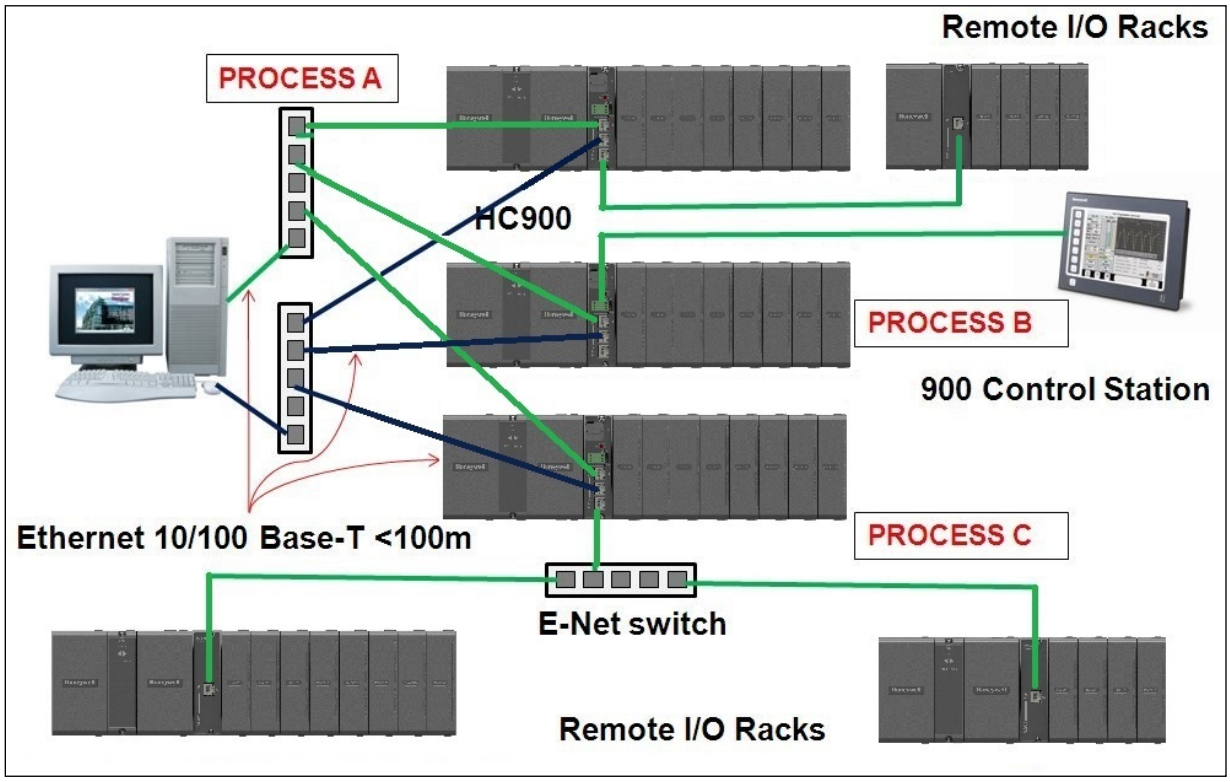

Figure 5 - MULTIPLE PROCESS/MULTIPLE RACKS – RED NETWORKS (STAR TOPOLOGY)

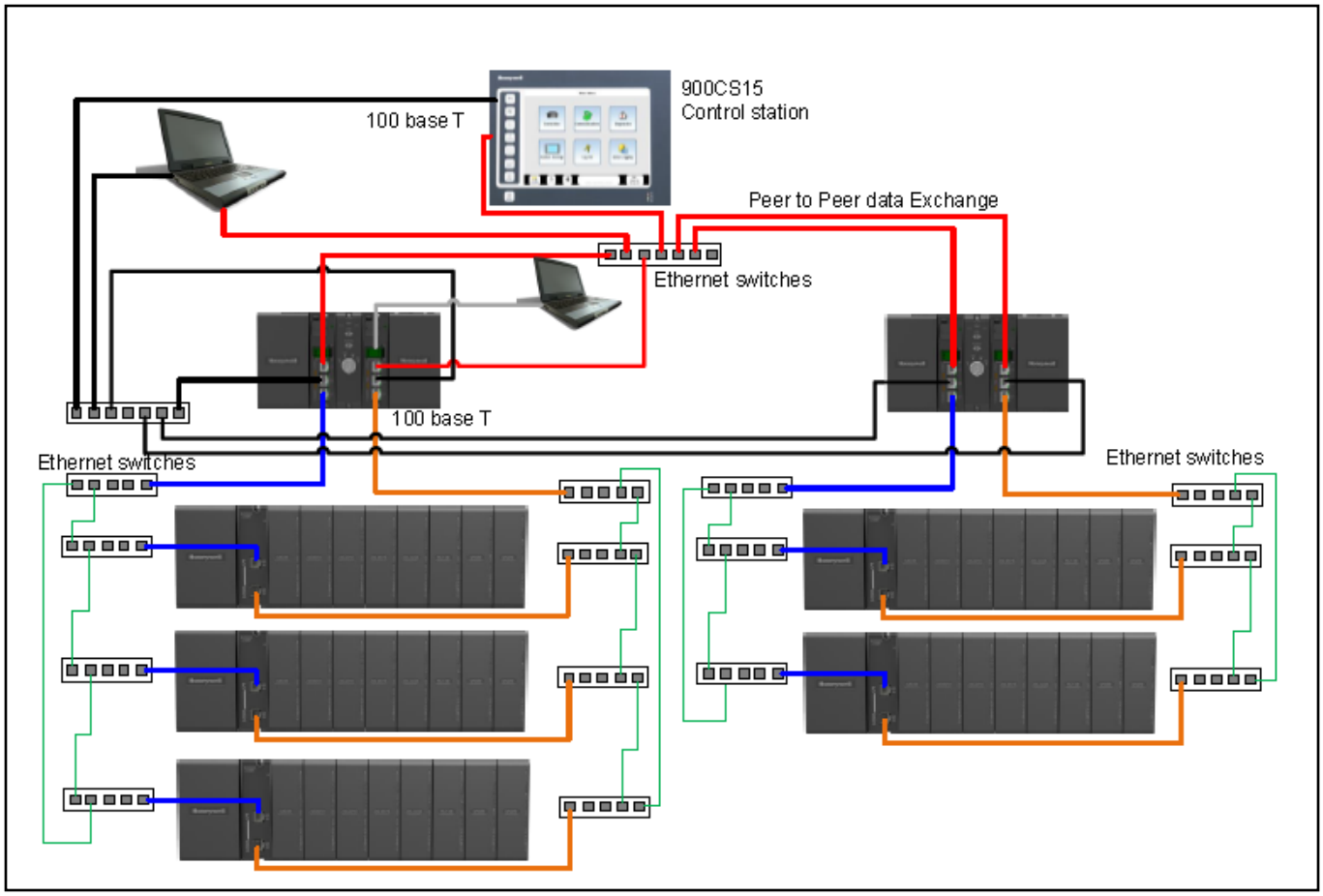

Figure 6 MULTIPLE PROCESS/MULTIPLE RACKS - RED NETWORKS (RING TOPOLOGY)

ControlEdge HC900 Controller

- The rack based ControlEdge HC900 Controller is available in 3 rack sizes with 4, 8 or 12 I/O slots each to support a wide range of requirements.
- Redundant C75 controllers use a separate controller rack for CPUs without local I/O. Two power supplies provide separate CPU power.
  A redundant controller switch module provides status and performs mode changes.

CPU Modules

- The CPU options available for the ControlEdge HC900 Controller include:
  - C30 and C50 for non-redundant applications.
  - C70 for dual networking.
  - C75 for redundant CPU applications and dual networking.
  - All ControlEdge HC900 CPU modules are based on the e300 32 Bit RISC based PowerPC Architecture. The controller operates out of a battery-backed DDR2 64MB memory for C30 and C50 modules, 128MB for C70 and C75 modules. DDR2 memory on all modules is supported with ECC circuitry to enhance reliability and error detection.
    Program execution environment is protected using an independent watchdog timer.
- All ControlEdge HC900 CPU modules offer open Ethernet communications for access by a variety of HMI and SCADA software applications and peer to peer communications for control data exchanges between controllers. The C70 and C75 provide dual Ethernet ports for high network availability installations.
- ControlEdge HC900 CPU modules use a dual scan method to handle fast digital scanning and normal analog input scanning in the same integrated control environment. Both scans support a wide range of computational function block algorithms and a user adjustable execution sequence order.

- ControlEdge HC900 CPUs use Flash memory for permanent user configuration program storage and battery-backed memory for dynamic data storage allowing for graceful recovery following a power interruption or other discontinuous operations. Using proven TL5903 primary batteries to support up to 24 days of continuous power outages
- 5000 SOE event buffering capability

I/O Scanners

ControlEdge HC900 Remote I/O is processed and communicated to the main CPU module through a remote I/O Scanner module. Two I/O scanner modules are available: a single port model for non-redundant CPU systems and a dual port model for redundant CPU systems. Scanner addressing in multi-rack systems is selectable via DIP switch setting.

Program execution environment is protected using an independent watchdog timer.

Inputs and Outputs - A variety of I/O modules are available for selection in creating a custom control solution. These include:

- 8-point universal analog input modules: Inputs may be mixed on a module and may include multiple thermocouple types, RTDs, ohms, voltage, current or millivoltage types – all easily assigned using the Designer configuration tool. High point-to-point isolation simplifies installation and saves the expense of external isolation hardware.
- 16-point high level analog input module: each point is configurable for V or mA. Point-to-point isolation.
- 4-point galvanically isolated analog output module: Supports from 0 to 20mA each.
- 8-point analog output module. Galvanically isolated in two groups of 4. Supports 0 to 20mA.
- 16-point (14-point for redundant configuration) Universal I/O module galvanically isolated Input/ Output to chassis. Each point can configured as DI, DO, AI or AO.
- 16-point digital galvanically isolated AC/DC input module.
- 16-point analog output module. Galvanically isolated in four groups of 4. Supports 0 to 20mA.
- 16-point digital galvanically isolated input modules: Contact closure type, DC voltage and AC voltage types.
- 32-point galvanically isolated digital input (sink) module: DC voltage
- 8-point AC or 16 point galvanically isolated DC digital output (sink) modules
- 32-point galvanically isolated digital output (source): DC voltage
- 8-point galvanically isolated high voltage
- 8-point galvanically isolated relay output module: four form C type and four forms A type relays.
- 4 channel Pulse/ Frequency/Quadrature I/O module

See Module Specifucation sheet 51-52-03-41 for details.

Insert & removal of I/O under power - For ease of maintenance, the ControlEdge HC900 controller supports removing and inserting modules from the card rack without removing power from the controller. Each card is sensed for validity by the controller and auto-configured on insertion. Hardware can be replaced without shutting down operations for replacement of CPU or Scanner modules thus reducing downtime and total cost of ownership.

I/O Terminal Blocks – 20-screw Terminal Blocks are available with either barrier style or Euro style screw connections. A module label area is provided for field wiring identification. An available 36-screw Euro Terminal block is required for certain high capacity modules.

Remote I/O - I/O racks may be remotely mounted from the controller via a dedicated Ethernet 10/100Base-T connection at up to 300 meters (984 feet) between the controller and the most remote rack using two Ethernet switches. Use of fiber optic cable extends distance to 40 Kilometers.

Remote Terminal Panels - Optional DIN rail mounted Remote Terminal Panels (RTPs) are available for use with pre-wired cables to reduce installation time and labor expense. RTP types available: analog input, relay output, discrete input, discrete output, analog output.
Three cable lengths are also available to match hardware to installation variations. See Module Specification sheet 51-52-03-41 for more details.

Redundant Power - A second (backup) power module may be added to each ControlEdge HC900 controller rack. An extended rack is available that expands the standard 8 and 12 I/O rack to accommodate a second (redundant) power supply and power status module.

Table 1 CPU Capacities

Function	Point per Module	Max. for C30 CPU	Max. for C50 CPU	Max. for C70/C75 CPU
Analog In	Universal: 8 High level: 16 UIO: 16	Universal: 96 High level: 192 UIO: 192	Universal: 1152 High level: 2304 UIO: 1920*	Universal: 1152 High level: 2304 UIO: 1920*
Analog Out	4, 8, 16	40	480	480
Analog Out (External power)	8, 16 UIO: 8	192 UIO: 192	2304 UIO: 416*	2304 UIO: 416*
Digital In	8, 16 or 32 UIO: 16	384 UIO: 192	4608 UIO: 1920*	4608 UIO: 1920*
Digital Out	8 AC or 16 DC, 32 DC UIO: 16	384 UIO: 192	4608 UIO: 1920*	4608 UIO: 1920*
Function Blocks	n/a	400	2000	15000 (5000 for version below 6.6)

* Check “System Planning Tool” to find out the maximum configurable UIO channels.

Redundant Architectures

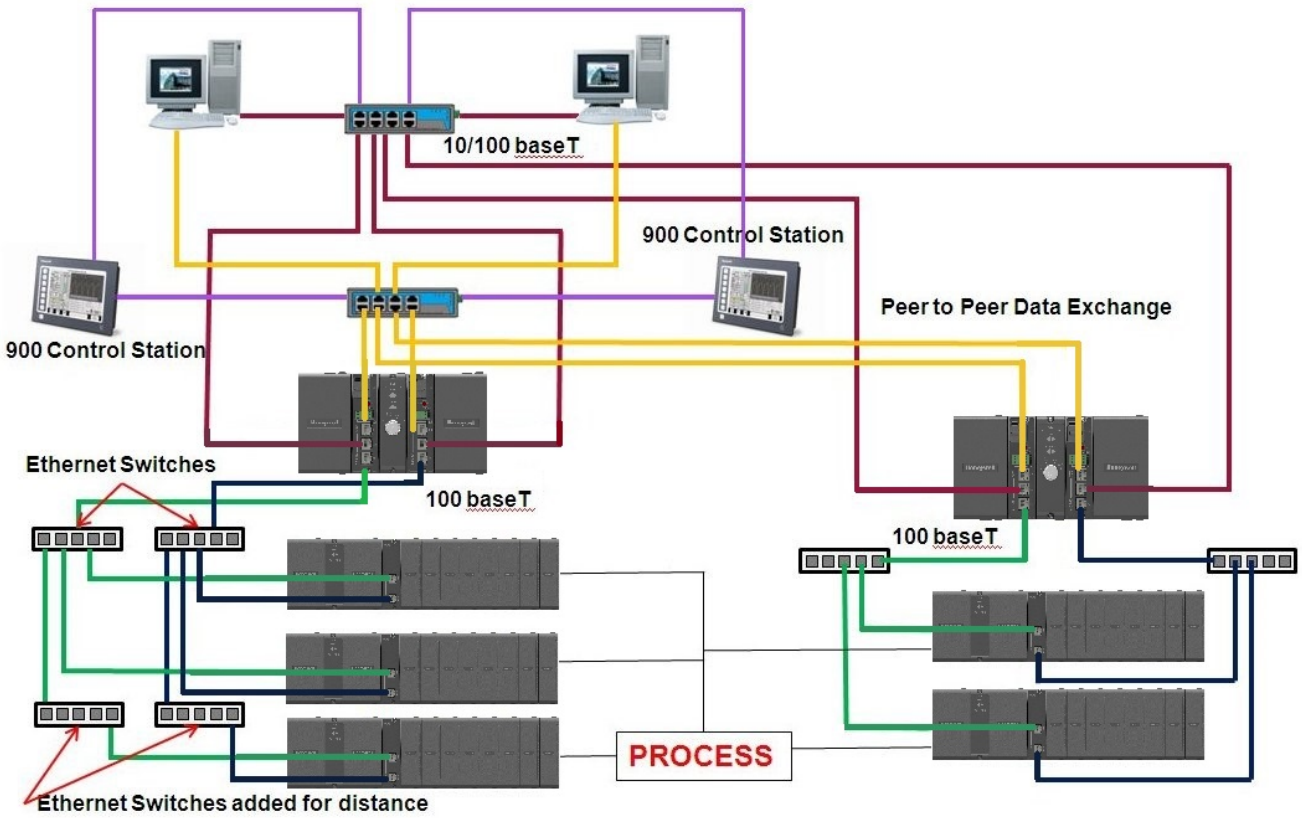

Figure 7 - Multiple Systems / Multiple Racks

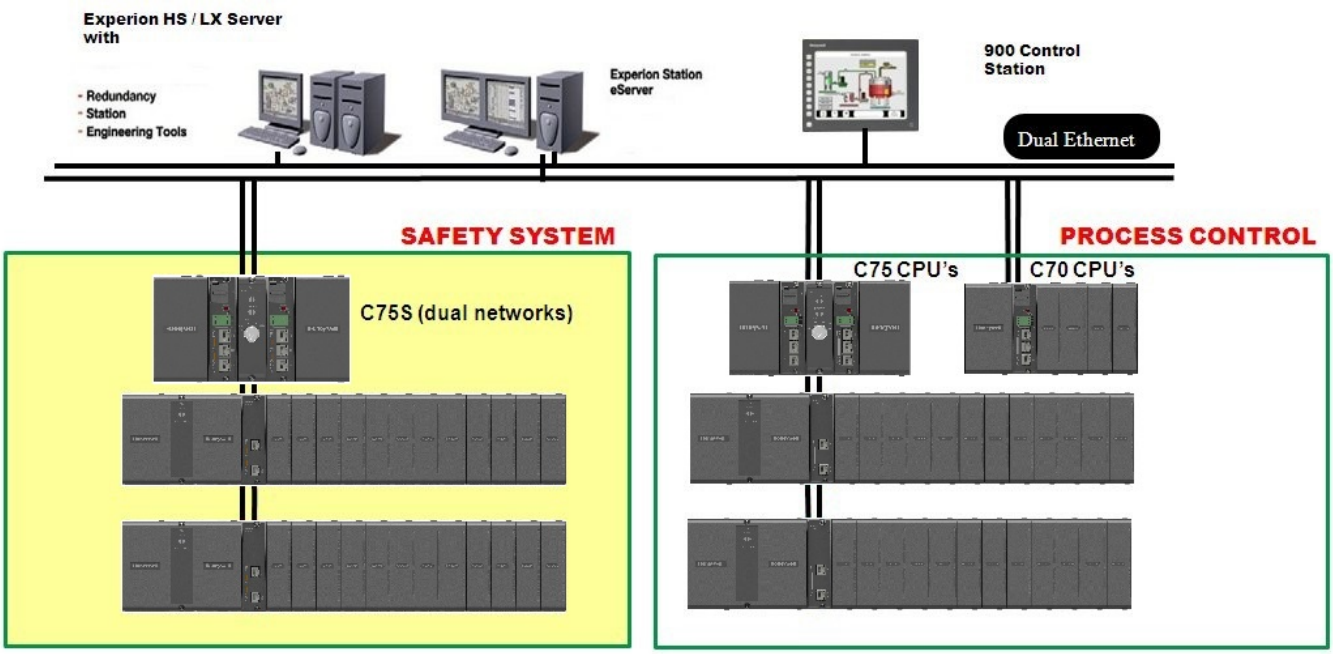

Figure 8 - Safety and Non-Safety in Separate Systems

Redundant Architectures

Redundant Controller

Two redundant C75 CPUs operate in a separately mounted controller rack, each with an independent 900PS1 model power supply. A Redundant Switch Module (RSM) is located in the rack between the two C75 CPUs. A key switch on the RSM allows the user to change the operating mode of the Lead CPU. There is no I/O in the controller rack; the CPUs communicate with up to 12 racks of I/O over a 100 base-T Ethernet physical communication link or fiber optics with an external media converter for greater distance. When more than one I/O rack is used in the system, Ethernet switches are required, one port for each Scanner connection. In operation, all control functions and host communication exchanges are handled by the Lead controller, including configuration and operator changes. The Lead controller updates the Reserve controller every scan cycle with all the information needed to assume control in the event of a fault condition.

After power-up of the C75 CPUs, the first available CPU assumes the Lead function. The Lead may be transferred to the Reserve controller by:

- Failure of the Lead controller,
- Manually changing a keyed switch located on the Redundant Switch Module,
- Input pin on Redundancy Status function block, or
- Instruction from host communication.

Dual Networks for Host communications are provided on the C75 CPU. Both network ports are continuously active on the Lead controller. Matrikon OPC server is available from Honeywell Matrikon to support dual Ethernet communications and automatically transfer communications.

The C75 network ports may otherwise be used in non-redundant mode where only one of the communication ports is used.

Remote I/O - To extend the distance between the CPU rack and the most distant I/O rack to 300m (984 ft.) up to two Ethernet switches may be used in each I/O connection. Distances up to 40km are possible with fiber optic cable.

Operator Interface – The 900 Control Station Operator Interfaces is supported with the C75 CPU. An Ethernet connection is made to a switch connected to the Ethernet port of each CPU. The operator interface communication to the controller follows the Lead controller assignment.

Status/Diagnostics - An output parameter of the system monitor function block of C75 CPUs provides a digital status of the Reserve controller to allow integration of this information into the control strategy. C75 CPUs also provide diagnostic status on redundancy operation that may be observed using Designer configuration software. A Redundancy status function block is also available to monitor redundant controller operation.

Function Blocks

A large assortment of analog and digital function blocks are available to solve the most demanding control requirements. Function blocks are grouped by scan rate, fast or normal, and by function, Principal or Standard.

Function Block Execution - All function blocks operate synchronously with I/O processing. Inputs are measured at the start of every scan and outputs are updated at the end of every scan. Function blocks such as Time Proportioning Outputs (TPO) and Position Proportioning outputs (PPO) require higher output resolution and are updated when the function blocks are executing. Micro-controllers on digital I/O modules can maintain TPO duty cycle operation during failsafe conditions. Micro-controllers on all I/O modules allow outputs to be configured to assume a default state in the event of a fault condition.

Normal Scan: Function blocks that execute during the Normal Scan are synchronized to the analog input measurements. The fastest update rate is 500ms.

100ms analog capable from version v6.300 and above. **Note:** Low Level AI updates @ 0.5 sec.

Fast Scan: The fastest update rate for fast scan function blocks in a single controller rack is 10ms. The update rate starts at 25ms when remote racks are used and for redundant systems.

Principal Function Blocks – These function blocks are supported by dedicated Widget objects in Station Designer software for configuring 900 Control Station operator interfaces. They have Tag names and other attributes to support on-line user interaction. Principal function blocks can be used any number of times in a configuration.
Typical Principal function blocks include PID, Set Point Programming, Sequencers, Alternators, Stage, etc

Standard Function Blocks – The number of standard function blocks that may be used in a configuration is virtually unlimited. Typical Standard blocks include totalizer, free-form math, average, mass flow, function generator, periodic timers based on real-time, carbon potential, RH, Dew Point, signal selection, comparison, gas flow, real time clock, and many others. These blocks may be configured to create control schemes that precisely address the needs of your process.

Digital status outputs are also provided on many of the analog function blocks to facilitate intelligent signal alarming and default operation strategies.

Typical logic function blocks include AND, OR, XOR, NOT, Latch, Flip-flop, On/Off Delay and Resettable timers, Counters, Free-form Boolean logic and more. The execution of analog and digital functions is seamlessly integrated into a single control strategy in the controller.

AI-V – The new AI-V function blocks will allow 1oo2 and 2oo3 voting for inputs and compares its values with one another and reports any deviation if validation between one another fails. Output value is calculated by comparing all inputs channels and selecting best of three.

DI-V - The new DI-V function blocks will allow 1oo2 and 2oo3 voting for inputs voting for inputs and compares its values with one another and reports any deviation if validation between one another fails. Output value is calculated by comparing all inputs channels and selecting best of three.

AO-V – The AO-V block is similar to the AO block but it provides additional functionality which allows users to validate the status of the output using a feedback input channel. The primary function of this block is to validate the feedback signal and provides indication when input fails to match the output due to possible reasons such as field power failure, cable failure, fuse etc. The function block will also check the feedback input signal for input module error, failed input channel and loss of feedback module communications.

DO-V - The DO-V block is similar to the DO block but it provides additional functionality which allows users to validate the status of the output using a feedback input channel. The primary function of this block is to validate the feedback signal and provides indication when input fails to match the output due to possible reasons such as field power failure, cable failure, fuse etc. The function block will also check the feedback input signal for input module error, failed input channel and loss of feedback module communications.

Alarms/Events

Alarms and events represent changes in digital status that require user notification. The ControlEdge HC900 controller supports an internal alarm annunciation system that may be setup to operate via e-mail to a remote computer (see Communications, E-mail Alarming). Up to 360 alarm points per controller may be grouped in 30 groups of 12.

Events are digital status changes that cause messages to be presented on the 900 Control Station operator interface. Controller events may prompt e-mail messages, do not require acknowledgement, and are reported and logged in a separate group. Up to 64 event points are supported in a controller.

Alarms and events are time stamped in the controller to a one second resolution.

Sequence of Event (SOE)

SOE is a mechanism for recording and determining the order (sequence) of digital state changes (on DI channel). High-resolution SOE uses 1 msec time stamping. SOE display tool (historian or control station) shall map the SOE event properties from signal number in configuration file.

Note: As of now SOE events across controllers may not be correlated properly as there is no time sync across controllers

Configuration

Controller configuration is performed using Designer Configuration software on a PC operating with a Microsoft Windows 7®, Windows 8® and Windows 10® operating system. Configuration files are built independently on the PC and downloaded to the controller in a separate operation.
Validation of proper physical I/O to support the configuration is provided along with appropriate warnings.

Configuration Back-build - In the event a PC configuration file is lost or misplaced, it can be easily reconstructed using the upload function of the Designer configuration software. Simply read the configuration from the controller to exactly duplicate the original configuration, including all text descriptions.

Configuration edit - In the event edits to a controller's configuration are required after the unit is in operation, an uploaded file may be monitored during process operation, edited, and downloaded with the on-line download function of the Designer. The software allows configuration changes while in the Run mode, limiting process disturbances.
Note: Forcing and downloads cannot be made on Safety controllers unless they are switched to the RUN/PROGRAM mode.

I/O Redundancy

CAUTION: For I/O redundancy, prefabricated cable length from RTP to Redundant UIO modules must be same.

- Flexibility in configuration
- I/O Redundancy RTP (Model No – 900RTI-0100)

Recipes

Recipes are groups of data defined by the user that are used to make multiple value changes in the controller through a single action. Function block types that accept recipe data and the quantity of recipes stored in the controller are listed in Table 2.
Recipes may also include Variables, which are dynamic analog and digital values used as inputs to standard and principal function blocks. Recipes may be loaded through the 900 Control Station operator interface by name or number, or via a dedicated recipe load function block and user configured logic.

Table 2 Recipe capacities

Function	Description	Content	Recipe size	# of recipes stored
Setpoint Programs	Profiles	Ramp/Soak values, times and event actions	50 Segments	Configurable
Setpoint Schedules	Schedules	Ramp/Soak values, times and event actions	50 Segments	Configurable
Sequencer	Sequences	State sequence, analog values	64 steps	Configurable
Variable	Recipe Variables	Analog and digital values	50 Variables	Configurable

Operator Interfaces

A ControlEdge HC900 controller can support up to three 900 Control Station operator interfaces via Ethernet or Serial communications. The interface is configured with Station Designer software using a database import function to simplify setup. See specification sheet 51-52-03-46 for more information on this interface.

Communications

Remote I/O Rack Port (C50, C70, C75) – An Ethernet port is dedicated to supporting remote I/O racks. This 10/100Base-T Connection on the C50 and C70 CPU supports a single direct connected remote rack or up to 11 remote racks when connected through an external Ethernet switch. The C75 CPU supports a single direct connected rack or up to 12 remote racks using external switches.

User Interface Support – The 900 Control Station interface may be connected via Ethernet or serial communications. Up to three interfaces may be connected to a controller for distances up to 328 feet (100Meters) via Ethernet or 2000 feet (609 meters) between the controller and operator interface. 3rd party user Interface support is provided through an isolated RS485 port connection using Modbus/RTU protocol, or Ethernet with Modbus/TCP protocol.

Ethernet Modbus/TCP Communications – ControlEdge HC900 controllers communicate with their host PC interfaces over an Ethernet 10/100Base-T communication network using the Modbus/TCP protocol, an open protocol interface available for most popular HMI software packages. The controllers Ethernet ports are MDIX and configured to auto negotiate and will default to half duplex if host fails to negotiate. The C30 supports up to 5 host connections while the C50/C70/C75 support up to 10 concurrent host connections over an Ethernet network for control supervision and data acquisition. The Designer software can also address any of the controllers concurrently over Ethernet for configuration monitoring, diagnostic interrogation, upload/ download, or on-line configuration changes. As a result, a ControlEdge HC900 network of controllers and operator interfaces can be partitioned into process segments to assure proper control performance. Each of these process segments, in turn, can be accessed via common HMI software within the plant environment using an Ethernet LAN.

Ethernet Peer to Peer Communications - Peer data communications between one ControlEdge HC900 controller and up to 32 other ControlEdge HC900 controllers is supported over Ethernet via UDP protocol for safety/process data sharing. Both digital and analog data exchange are supported using peer data exchange function blocks, up to 2240 (max 44 peer writes per slave) parameters between peer controllers. For SIL variants the safety peer function blocks can be used for Safety peer communication along with peer data exchange function blocks. No specialized software is required. Peer data can be given signal tag references for use in a control or data acquisition strategy. Peer to peer data interchange does not consume one of the host connections.

Serial Modbus RTU Communications - Serial Modbus RTU communications is available on the isolated RS485 (2 wire) ports of the ControlEdge HC900 Controller CPU assembly in a Master or Slave mode. The protocol of these ports is user selectable between ELN protocol for use with HC Designer software or Serial Modbus to interface with other compatible devices.

Modbus RTU Slave - Isolated RS485 ports may be configured for simultaneous operation as a Modbus slave port to allow each to communicate with a single Modbus master.

The Modbus protocol supports read and write access to a default address map of certain function blocks and parameters.

In configurations 4.0 and later, a map of customized addresses, blocks and parameters can be created either by editing the default map or from scratch.

In the default map (fixed), a 4000 register array is available to allow the user to specify the address locations of specific controller data to optimize controller communications.

The data in the array may also be accessed in user specified formats (data types) such as analog data in Float 32, unsigned 16, signed 16, unsigned 32, signed 32, and digital data in signed 16 or unsigned 16.
The data type selections in the 4000 register array provide compatibility with devices such as 3rd party touch panels. In the custom map, all data formats are adjustable.

Modbus RTU Master - Either of the ports may be configured as a Modbus RTU master, one per controller. Up to 32 devices may be multi-dropped on the isolated RS485 port. Function blocks are available in the ControlEdge HC900 controller to allow the user to specify read and write operations to up to 32 external Modbus compatible slave devices and up to 1024 data points.

Modbus TCP Initiator – The Ethernet ports may be configured as a Modbus TCP initiator. Function blocks are available in the ControlEdge HC900 controller to allow the user to specify read and write operations to compatible slave devices for up to 1024 data points.

Profibus – The ControlEdge HC900 can access data from Profibus slave devices using a Modbus-to-Profibus gateway device attached to the serial port of the controller. The gateway device is a Profibus Master on the fieldbus network and a Modbus slave to the ControlEdge HC900. The Profibus data is connected into the control strategy using Modbus function blocks. This application has been validated with a ProLinx 5104-MCM-PDPM gateway (from ProSoft® Technology).

E-mail Alarms/Events--ControlEdge HC900 alarms or events can be individually configured to send an e-mail alarm (or event) message to e-mail addresses with the assigned alarm priority.

- Number of e-mail addresses: 3 based on alarm priority
- From: Controller name (up to 16 characters)
- Subject: text (up to 32 characters)
- Content: date and time of alarm/event, alarm/event tag name, alarm/event state
- Message: 48 character text (for alarms only)
- Priority Levels: 4 for alarms, 1 for events

Controller Configuration Access –Designer software supports communicating with ControlEdge HC900 controllers using an Ethernet or serial connection using ELN protocol to support direct PC connection for configuration upload, download, debug and maintenance. Modbus RTU protocol is also supported through the serial port interface. Once the ControlEdge HC900 controller has been configured using Designer Software, on-line configuration changes may be made while maintaining process control. Configurations may also be loaded into the controller via the Ethernet TCP/IP network from a host PC. On-line monitoring for program debug and on-line program edit functions are also supported via the Ethernet port.

Modem Access – Communications to the ControlEdge HC900 controller may be via an external modem connected to the controller's using an RS485/RS232 converter. HC Designer software supports configuration upload, download and on-line edits via modem. When modem communication is selected, Modbus RTU communication timeouts are extended.

Experion Supervisory Software – Honeywell's Windows 10 version is available when PC-based supervisory control and data acquisition is required. Ethernet network interface to an Experion server is via the controller host Ethernet 100 Base-T port using Modbus/TCP protocol. Client Stations over Ethernet allow multiple user access to a ControlEdge HC900 network. Using the large selection of standard operating display templates in Experion saves development time.

When further customization is needed, the full graphic display development environment of Experion may be used to fully animate your process supervisory displays.

A batch reporting option is offered in Release 500 and 430 which enables batch reports to be created using a standard template. User-entered lot data is supported and up to 50 parameters can be defined for batch logging. The file can be exported in .csv format using a lot number-encoded filename.

SpecView32 Supervisory Software – SpecView32 software can be used as a supervisory interface for thermal-based applications, offering historical trending, batch reporting, recipe development involving setpoint programs and simplified graphics configuration.

ControlEdge HC900 parameters are simply selected from categorized lists for placement on user-configured displays or onto display objects.

Network connection is via the controller host Ethernet 10/100Base-T port using Modbus/TCP protocol. A variety of Windows operating environments are supported

OPC Server – Network communication access to ControlEdge HC900 controllers through third party PC interfaces is simplified with Honeywell's Matrikon OPC server software program. This software supports the Modbus/TCP interface to either redundant or non-redundant ControlEdge HC900 controllers. In redundant applications, Matrikon OPC Server software supports dual Ethernet connections to both C75 CPUs. Communications to the controller is maintained during a single network failure and/or following the transfer of the Lead function from one CPU to another. Compatible OPC client programs can use the Ethernet connection to the ControlEdge HC900 via Honeywell's OPC Server for remote supervision, data collection or other supervisory functions.

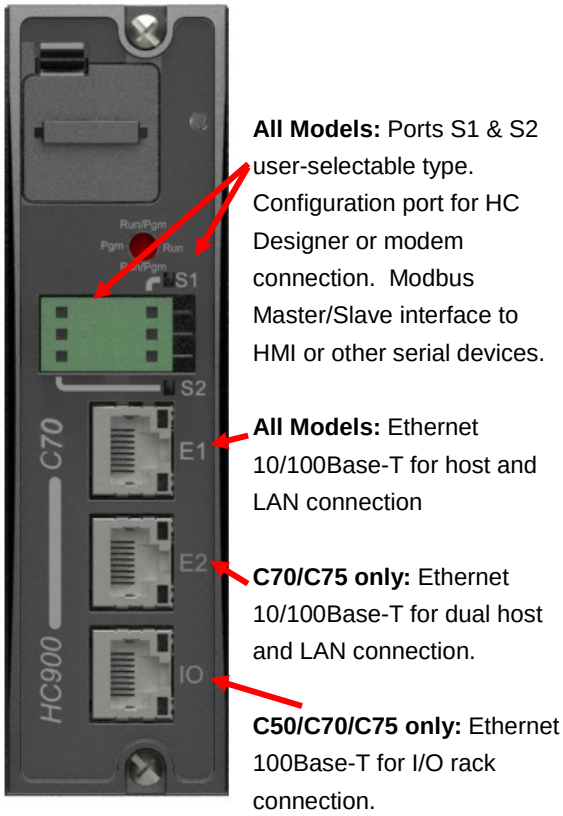

Figure 9 - Communication ports

Capacity

The capacity of the ControlEdge HC900 system is determined by the type of CPU selected, the quantity of I/O racks, the quantity's type of I/O modules, the update rate (scan rate) required, and CPU memory. In most applications, the CPU memory limit has a low probability of limiting capacity.

How many I/O channels?

Number of I/O is limited only by physical space. Namely, the number of racks, the number of modules per rack, and the number of channels in the modules. In general,

Maximum I/O channels = (max. number of I/O racks) x (max. number of modules in each rack) x (max. number of channels per module)

Examples

Maximum C30 I/O = 1 rack x 12 modules x 32 channels per module = 384 I/O channels

Maximum C50, C70, C75 I/O = 12 racks x 12 modules per rack x 32 channels per module = 4608 I/O channels.

Maximum C75 Redundant UIO = 6 Redundant racks (12 racks) x 12 modules per rack x 14 channels per module = 1008 I/O channels.

How many function blocks (loops, programmers, etc.)?

Fixed limits are not imposed on function block types. Your configuration can probably contain as many of each function block as needed. The limit is reached when either

a) Dynamic memory is full or

b) Maximum function block quantity is reached or

c) Configuration memory is full or

d) Over 65,535 block configuration parameters or block inputs used (but not Block Outputs).

These limits are explained below.

a) *Dynamic Memory*

The rule of thumb is: *Max. number of function blocks = Dynamic memory ÷ memory per function block*

The smaller the function block, the more of them can fit in your configuration.

b) Quantity

Memory limitation is not for function blocks.

Complex blocks such as PID, Programmer, and Scheduler Sequencer use more memory than simpler blocks like On/Off, Device Control, Auto/Manual Bias. For example, several thousand Auto/Manual Bias blocks would fit in the C30's memory if not for the quantity limit of 400.

Conversely, about 300 Scheduler blocks will consume all the C30's memory despite the higher quantity limit of 400.

Scan Time Consideration

Another consideration when configuring function blocks is scan time and the potential for CPU scan time to become insufficient for the application.

The scan time of a controller increases in fixed increments. As function blocks are added to a configuration, the time needed to execute the total configuration is recalculated. If additional time is needed, the scan time will be increased to the next increment in sequence. (See Specification section for scan time increments)

How many recipes in my pool?

Unlike with function blocks, there is no quantity limit to recipes. The only limiting factor to recipe pool size is available memory. Whatever memory is unused by the rest of your configuration (that is, function blocks) can be allocated for recipes. As long as memory is available, allocate as many recipes as needed.

The rule of thumb is
Max. number of recipes = Recipe memory allocation ÷ memory per recipe

Configuration memory allocation
The configuration memory comprises one allocation for the function block configuration and one allocation for recipes.
In general,
Total configuration memory = Configuration + Recipe allocation

Whatever memory has not been allocated to recipes is available for your configuration. By changing the size of the recipe pool allocation, you control the amount of memory available for recipes and therefore configuration. Need a small configuration but many recipes? Allocate more recipe space. Need a large configuration but few recipes?
Allocate less recipe space.

Where are usage/capacities presented?
File Properties in Designer displays statistics on usage/availability of:

- configuration memory (recipes + function block configuration),
- dynamic memory (function block configuration only)
- fast scan time,
- Normal scan time,
- Normal CPU% used,
- Fast CPU% used,
- Each component of a configuration (variables, constants, etc.).

Controller Data Storage
The controller may log process data values in the available memory that is not used by the configuration. Up to 250 signal values may be logged in a rotating buffer using three different sample rates with oldest data being replaced with new data after the buffer is full.

Data is extracted from the controller using HC Historian data harvesting software via Ethernet or Serial connection.

Specifications

Features				
	C30	**C50**	**C70**	**C75**
Controller Design	Modular design with metal rack enclosure, power supply, controller CPU and user selectable I/O module types.			
Rack Mounting and Installation	Surface mounting with 4 screws in the back of the rack. Installation Category II, Pollution Degree 2, IEC 664, UL840 Installation coordination			
Controller I/O support	4, 8, or 12 I/O slots per Rack			None (requires remote I/O racks)
Remote I/O racks	None	1 w/o switch, using Ethernet direct cable. Up to 11 with recommended Honeywell switches (part no. 50008930-001, copper to copper)		
		1 w/o switch, using Ethernet direct cable. Up to 12 with recommended Honeywell switches (EDS-308-MM-SC, copper to fiber) for Star topology		
		1 w/o switch, using Ethernet direct cable. Up to 12 with recommended Honeywell switches (EDS-505A/EDS-508A series or equivalent, copper to fiber) in Remote IO for Ring topology		
Remote I/O interface type	None	Separate Ethernet 100Base-T port on CPU, RJ-45 connection, dedicated communications link		
Remote I/O Distance	None	100 m (328 ft.) – Ethernet cable, controller to remote rack or controller to switch. Up to two switches per connection, 300m (984 ft.), maximum distance. 40km – Single mode fiber optic cable 5km – Multi mode fiber optic cable.		
	Fiber Optics Equipment Recommendations			
	Ethernet Switch	Moxa Unmanaged Ethernet Switch model EDS-308-MM-SC/ EDS-308-SS-SC with (6) 10/100 Ethernet ports for star topology, Moxa managed Ethernet Switch model EDS-505A/EDS-508A Series or equivalent in Remote IO with 10/100 Ethernet ports for Ring topology (2) single/multi-mode fiber ports with SC Connectors (require 24VDC power)		
	Converter	Moxa Media Converter model IMC-101-M-SC/ IMC-101-S-SC with (1) 10/100BaseT(X) to 100BaseFX single/multi-mode fiber port with SC connectors (require 24VDC power)		
	Fiber Cable	Multi-mode, Duplex, 50/125 with SC connectors on both ends Single mode, duplex, 9/125 with SC connector on both ends		
	Copper Ethernet Cable	Shielded Cat5 Ethernet		
I/O Capacity Combined Analog and Digital	384	4608		
Analog Inputs	192	2304		
Analog Outputs	40 48 with heat de-rating 192 with external power source	480 576 with heat de-rating 2304 with external power source		

	C30	C50	C70	C75
Rack Size				
4 I/O slot chassis	5.4” (137mm) H” x 10.5” (266.7mm) W x 6.0” * (151.7 mm) D (rear mounting plate extends height to 6.9” (175.3mm)			
8 I/O slot chassis	5.4” (137mm) H x 16.5” (419.1mm) W x 6.0” * (151.7mm) D (rear mounting plate extends height to 6.9” (175.3mm)			
8 I/O slot chassis with redundant power support	5.4” (137mm) H x 20.9” (530.9.1mm) W x 6.0” * (151.7mm) D (rear mounting plate extends height to 6.9” (175.3mm)			
12 I/O slot chassis	5.4” (137mm) H x 22.5” (571.5mm) W x 6.0” * (151.7mm) D (rear mounting plate extends height to 6.9” (175.3mm)			
12 I/O slot chassis with redundant power support	5.4” (137mm) H x 26.9” (683.3mm) W x 6.0” * (151.7mm) D (rear mounting plate extends height to 6.9” (175.3mm)			
Redundant CPU rack	N/A * *6.4 (162.6) for 32 DI/DO and 16 AI Modules*			5.4” (137mm) H x 10.3” (261.6mm) W x 6.0” * (151.7mm) D (rear mounting plate extends height to 6.9” (175.3mm)
I/O Wiring				
Type	Removable terminal blocks			
Terminal Block Styles	20 screw: Barrier or Euro-style, tin-plated or gold-plated (for DC connections) 36 screw: Euro style gold plated (Required with certain higher capacity modules)			
Gauge wires	20 screw: Barrier style - #14 to 26 AWG, solid or stranded Euro-style - #14 to 26 AWG, solid or stranded 36-screw: Euro-style - #12 to 26 AWG, solid or stranded			
Shield terminals	Optional brackets mounted top/bottom of rack			
Power (P01)				
Voltage	Universal power, 90 to 264VAC, 47 to 63 Hz			
In Rush Current	40 Amps peak-to-peak for 120 ms at 240VAC			
Input rating	130 VA			
Output rating	60W			
Fuse	Internal non-replaceable fuse. User installed external fuse.			

	C30	C50	C70	C75
Power (P24) Voltage	21 to 29VDC			
In Rush Current	30A for 3ms @29VDC			
Input rating	72.5W			
Output rating	60W			
Fuse	Internal non-replaceable fuse. User installed external fuse.			
Power Supply Hold up time	20milliseconds @115VAC, 60HZ maximum Load			
Normal Scan Time	100ms. Each analog input card has its own A/D converter providing parallel processing.			
Fast Scan Time	25ms for up to~250 fast logic blocks 35ms for up to ~315 fast logic blocks 50ms for up to ~400 fast logic blocks	10ms for up to ~250 fast logic blocks 25ms for up to~500 fast logic blocks 35ms for up to ~780 fast logic blocks 50ms for up to ~1040 fast logic blocks 60ms for up to ~1300 fast logic blocks	10ms for up to ~330 fast logic blocks 25ms for up to~660 fast logic blocks 35ms for up to ~1040 fast logic blocks 50ms for up to ~1380 fast logic blocks 60ms for up to ~1700 fast logic blocks 130ms for up to~3300 fast logic blocks	25ms for up to~500 fast logic blocks 35ms for up to ~780 fast logic blocks 50ms for up to ~1040 fast logic blocks 60ms for up to ~1300 fast logic blocks 130ms for up to~2500 fast logic blocks
System latency - terminal to terminal	Typical 3x scan			
Switchover	0-100ms			
Bumpless Failover	Internal parameters, variables and outputs are maintained during transition.			
Run-Mode Edit Transfer Time	3 normal scan times for all configuration edits not including I/O changes			
Operating Modes	Run (No configuration download in this position). No writes/forces for safety critical configurations. Run/Program (Download allowed) Program (Outputs Off, initialization on download). Offline mode is available via software selection (for AI calibration).			
Maximum user-configurable Function Blocks	400	2000	15000 (5000 for version below 6.6)	
Maximum Control Loops	Quantity based on available memory			
System Blocks (Not user configurable)	100 (not part of configurable blocks), for Alarm Group blocks, System block, Rack Monitor blocks, Communications			
Loop Outputs	Current, time proportional, position proportional, 3-position step (motor positioning), dual output [heat/cool])			

	C30	C50	C70	C75
Control Loop Types	PID A, PID B, Duplex A, Duplex B, Ratio, Cascade, % Carbon, Dewpoint, Relative Humidity, On-Off, Auto/Manual-Bias			
Auto-tuning	Accutune III, fuzzy logic overshoot suppression, applicable to all control loops			
Setpoint Programmers	Ramp Types: Ramp Rate or Ramp Time Time Units: Hours or Minutes Segment Time: 0-99,999.999 hours or minutes Program Cycles: Up to 100 or infinite, configurable segment range			
Programmer Events	Assignable to DO or internal status			
Setpoint Profiles	50 segments per profile. Number of stored profiles is user-configurable.			
Setpoint Scheduler	Ramp type: Ramp time Time units: Hours or minutes Segment time: 0.001 to 9999.999 hours or minutes Cycles: Per segment to 999 or infinite			
Auxiliary Scheduler Setpoints	Up to 8 setpoints, soak only			
Schedule events	Up to 16, assignable to DO or internal status			
Setpoint Scheduler Schedules	50 segments per schedule. Number of stored schedules is configurable.			
Sequencers	States: 50 State text: 12 characters Steps: 64 Time Units: Minutes or Seconds Digital Outputs: 16 Analog Output: 1, configurable value/step Step Execution: On Time, Event 1, Event2, or via Advance Next Step: Any step			
Sequences	Number of stored Sequences is user-configurable			
Recipes (Variables)	Number of stored Recipes (Variables) is user-configurable			
Recipe Parameters	Up to 50 analog or digital Variables — (may include profile numbers)			
Signal Tags (Read only)	Up to 65,535			
Tag Identification	16-character tagname, 16-character descriptor, 6-character units of measure (analog only), 6 character on/off state (digital only). Non-Safety Critical enable.			
Variables (Read/Write)	Up to 6144			
Variable Identification	16-character tagname, 16-character descriptor,6-character units of measure (analog only), 6 character on/off state (digital only)			

Controller Data Storage	• Data types: Signals, Alarms, Events • Storage size: 1.5MB for C30/C50 3MB for C70/C75 • Maximum signals tags: 250 • Maximum points per group: 50 • Selectable storage rates: 3 • Storage rate resolution, 10 sec. to 24hr • Data Access - via HC Historian PC software, manual upload using Ethernet or Serial communications.

Specifications

Communications				
	C30	**C50**	**C70**	**C75**
Network Communications Ports Number of Ethernet 10/100Base-T connections	1	1	2	2
Ethernet 10/100Base-T, RJ-45 connection	Supports Modbus/TCP Protocol to PC supervisory and data acquisition software packages, OPC server, Modbus/TCP Initiator, Peer to Peer, and Designer configuration software		Supports dual Modbus/TCP ports to PC supervisory and data acquisition software packages, OPC server, Modbus/TCP Initiator (non-redundant), Peer to Peer, and Designer configuration software	
Max. number of concurrent Ethernet host connections	Up to 5 (peer data exchange does not consume a host connection)	Up to 10 shared between two ports (peer data exchange does not consume a host connection).		
USB-RS485 Converter	50089787 -501			
RS-485 Ports Ports per controller	Two, isolated RS-485 (connector supplied), Honeywell or Modbus RTU protocol.			
Cable type	2-wire plus shield, Belden 9271 or equivalent			
Distance from controller	2000 ft. (600 m.)			
Modbus Slave addresses	1 to 247			
Parity (user selectable)	Odd, even, none			
Stop bits (user selectable)	1 or 2			
Speed (user selectable)	1200, 2400, 4800, 9600, 19200, 38400, 57600, 115200			
Double Register Format for Modbus RTU Slave and Master data (User selectable)	Selectable byte order			
RS-485 Modbus, Slave Operation				
Number of ports per controller	Up to two			
Masters per port	One			
Principal Function Block Address Range	User selectable starting address range for registers assigned to each principal block type.			

RS-485 Modbus Master Operation	
Number of ports per controller	One (isolated RS485)
Function Block Types	Slave – 4 read and 4 write data points Read (Slave extension block) up to 16 parameters Write (Slave extension) up to 8 parameters (No limit on the number of Read and Write extension blocks per Slave block up to the maximum 1024 parameters per controller.)
Slave devices per controller	Up to 32
Number of read/write Modbus Parameters	Up to 1024 max. per controller
Double Register Format	Selectable per device
Speed	1 second fastest – load dependent
Modbus Master Advanced Application Speed	Recommended for use with gateway devices As fast as 500ms
Ethernet Modbus/TCP Initiator Operation	
Number of ports per controller	One (Models C30 and C50) - Two (Models C70 and C75) isolated RS485
Function Block Types	Slave – 4 read and 4 write data points Read (Slave extension block) up to 16 parameters Write (Slave extension) up to 8 parameters (No limit on the number of Read and Write extension blocks per Slave block up to the maximum 1024 parameters per controller.)
Slave devices per controller	Up to 32
Number of read/write Modbus Parameters	Up to 1024 max. per controller
Double Register Format	Selectable per device
Speed	1 second fastest – load dependent
Peer-to-peer	
10/100Base-T via Network port	Supports UDP protocol and Peer Data Exchange function blocks for peer data exchange. Safety peer data exchange is supported from release 6.300 and above
No. of Peers/Controller	32
Update rate	@Normal cycle for safety peer and 500ms to 5 sec., selectable
Peer Data	Digital and Analog Signal Tags, Variables - up to 2240 (max 44 peer writes per slave) parameters
Ethernet	
Ethernet Network Connection	10/100 Base-T, RJ-45
Host Network Protocol	Modbus/TCP

Maximum distances per Ethernet specifications		
Controller rack to I/O Rack	Ethernet CAT5 cable with RJ-45 connectors Fiber Optic cable with switch	100m /328 ft 40km
Controller to Ethernet Switch	Ethernet CAT5 cable with RJ-45 connectors	100m /328 ft
Ethernet Switch to I/O Rack	Ethernet CAT5 cable with RJ-45 connectors	100m /328 ft
Controller to Network Switch	Ethernet CAT5 cable with RJ-45 connectors	100m /328 ft
Network Switch to PC	Ethernet CAT5 cable with RJ-45 connectors	100m /328 ft
Controller to 1042 Operator Interface	Shielded, Twisted pair	610m /2000 ft

Approvals	
CE Conformity	This product is in conformity with the protection requirements of the following European Council Directives: **2006/95/EC**, the Low Voltage Directive, and **2004/108/EC**, the EMC Directive. Conformity of this product with any other “CE Mark” Directive(s) shall not be assumed. EN61326: Electrical Equipment For Measurement, Control and Laboratory use. EMC requirements.
ATEX	The apparatus fulfills the requirements for Group II, Category 3 equipment in accordance with Directive 94/9/EC.
TUV (SIL2)	ControlEdge HC900 complies with the requirements of the relevant standards and can be used in applications up to SIL2 according to IEC 61508, for low demand applications and high demand applications where the demand rate does not exceed 10 times per year. ControlEdge HC900 is capable of being used in safety applications including (but not limited to) Emergency shutdown (ESD), Burner Management Systems (BMS), Critical process control etc.
ABS PDA Approval	Certificate of Design Assessment - No. 06-HS186538-4-PDA (June 2014.) Certificate of Manufacturing Assessment - No. 06-BA766694-X (York Location) Certificate of Manufacturing Assessment - No. BY1100081X (Pune Location) ControlEdge HC900 control system is NOT to be used for direct propulsion, steering, navigation or safety systems. The controller must be installed in a grounded metal enclosure and must not be used in non-weather protected spaces. Each application is to be approved on a case by case basis
General Purpose Safety	Compliant with EN61010-1, UL, UL 61010C-1 2nd addition, CSA C22.2 No. 1010-1
Hazardous (Classified) Location Safety	FM Class I, Div. 2, Groups A, B, C, D CSA Class I, Div. 2 Groups A, B, C, D Class 1, Zone 2, IIC II 3 G Ex nA IIC T* Gc AMBIENT TEMPERATURE: 0 °C to +60 °C

Module Temperature Classifications	Module Type	"T" Rating	Module Type	"T" Rating
	Redundant CPU Rack (1)	T6	S75 Scanner 2 Port	T4 (1)
	Redundant PS Ext. Rack(1)	T5	Analog Input (8 chan)	T6 (1)
	8 Slot Redundant PS Ext. Rack(1)	T6	Analog Input (16 chan)	T6 (1)
	12 Slot Redundant PS Ext. Rack(1)	T6	Analog Output (4 chan)	T4 (1)
	4 I/O Slot Rack(1)	T6	Analog Output (8 chan)	T4 (1)
			Analog Output (16 chan)	T3C (1)
	8 I/O Slot Rack(1)	T6	Digital Input, Contact type (16 chan)	T5 (1)
	12 I/O Slot Rack(1)	T6	Digital Input, 24 Vdc (16 chan)	T4 (1)
	Power Supply (P01) (1)	T4	Digital Input, 120/240 Vac (8 chan)	T3C(1)@ Ta=60 °C T4 (1)@ Ta=40 °C
	Power Supply (P02) (1)	T4	Digital Input Vdc (32 chan)	T3C@60 °C and T4@40 °C
	Power Supply (P24) (1)	T4	Digital Output, Relay type (8 chan)	T5(1)
	Power Status Module (PSM) (1)	T6	Digital Output, 24 Vdc (16 chan)	T4 (1)
	C30/C50/C70/C75 CPU(1)	T4	Digital Output, 120/240 Vac (8 chan)	T4(1)
	Redundancy Switch Module (RSM) (1)	T6	Digital Output Vdc (32 chan)	T6 (1)
	S50 Scanner 1 Port(1)	T4	Pulse/Frequency/Quadrature (4 chan)	T5

(1) Modules – included in IEC-61508 certification

Specifications

Environmental Conditions				
Ambient Temperature	Reference	Rated	Extreme	Transportation & Storage
°F °C	77+/-5 25+/-3	32 to 140 0 to 60	32 to 140 0 to 60	-40 to 158 -40 to 70
Ambient Relative Humidity	*45 % to 55 % RH non-condensing	*10% to 90 % RH non-condensing	*5 % to 90 % RH non- condensing	*5 % to 95 % RH non-condensing
Mechanical Acceleration Duration	0 g 0 ms	1 g 30 ms	1 g 30 ms	Not rated
Vibration	0 Hz 0 g	0 Hz to 14 Hz—amplitude 2.5 mm (peak-to-peak). 14 Hz to 250 Hz—acceleration 1 g		
* Applies up to 40°C				

Dimensions

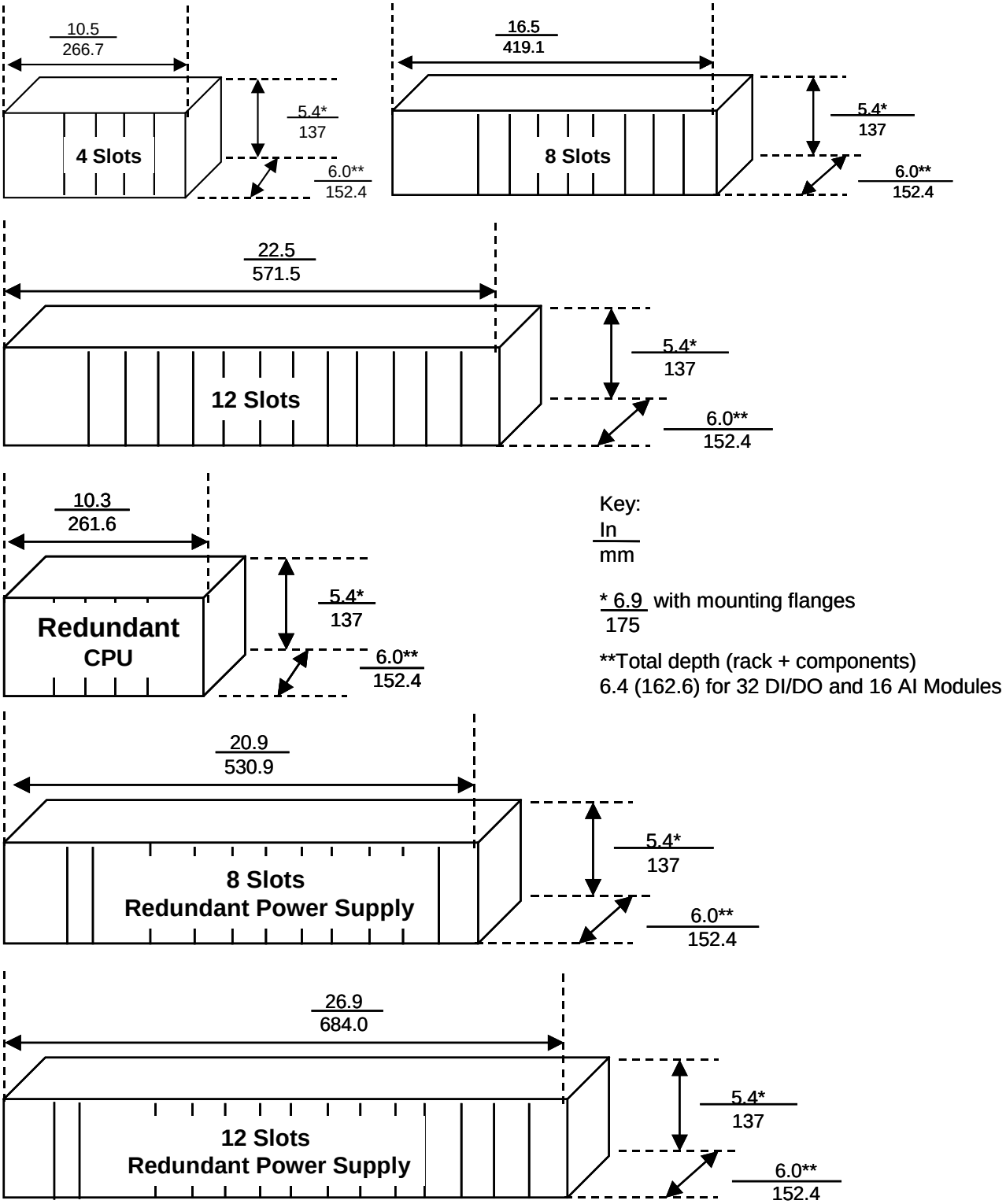

Figure 10 - ControlEdge HC900 Controller Dimensions

Warranty/Remedy

Honeywell warrants goods of its manufacture as being free of defective materials and faulty workmanship. Contact your local sales office for warranty information. If warranted goods are returned to Honeywell during the period of coverage, Honeywell will repair or replace without charge those items it finds defective. The foregoing is Buyer's sole remedy and is **in lieu of all other warranties, expressed or implied, including those of merchantability and fitness for a particular purpose**. Specifications may change without notice. The information we supply is believed to be accurate and reliable as of this printing. However, we assume no responsibility for its use.

While we provide application assistance personally, through our literature and the Honeywell web site, it is up to the customer to determine the suitability of the product in the application.

Sales and Service

For application assistance, current specifications, pricing, or name of the nearest Authorized Distributor, contact one of the offices below.

Honeywell

51-52-03-31
November 2019

©2019 Honeywell International Inc.